Embrace the Technology®
CircuitSolver®
A ThermOmegaTech® brand

NSF/ANSI/CAN 61 / 372

# CircuitSolver® Union Assembly with Strainer (CSUAS)

[Thermostatic balancing valve with integrated union body, ball valves, and strainer]

## SUBMITTAL

| | | |
|---|---|---|
| **JOB:** | **ORDER NO:** | **DATE:** |
| | **SUBMITTED BY:** | **DATE:** |
| **UNIT TAG:** | **APPROVED BY:** | **DATE:** |
| **CITY:** | **ENGINEER:** | **BUILDING TYPE:** |
| | | |
| **STATE:** | **CONTRACTOR:** | **CONSTRUCTION TYPE:** |
| | | |
| **COMPLETION DATE:** | | |

## DESCRIPTION

The CircuitSolver® Union Assembly with Strainer's primary component is the CircuitSolver® which is a self-acting thermostatic recirculation valve that automatically and continuously maintains the end of each domestic hot water supply line at the specified water temperature. Since the CircuitSolver® responds to water temperature and controls flow to the return, it eliminates the need to manually balance the system. The featured strainer (20 mesh) must be maintained in order to avoid flow obstruction.

## DIMENSIONS

| Item No. | Part Number | Description | Qty. |
|---|---|---|---|
| 1 | 258-20X100-XXX | ½" CIRCUITSOLVER® THERMOSTATIC BALANCING VALVE WITH INTEGRATED UNION | 1 |
| 2 | 92-162 | ½" X CL NIPPLE BRASS LF | 1 |
| 3 | 92-160 | BALL VALVE, ½" MxF, LF | 2 |
| 4 | 92-200 | Y-STRAINER, ½" BRASS | 1 |

*ALL COMPONENTS ARE LEAD-FREE

| Item No. | Part Number | Description | Qty. |
|---|---|---|---|
| 1 | 258-30X100-XXX | ¾" CIRCUITSOLVER® THERMOSTATIC BALANCING VALVE WITH INTEGRATED UNION | 1 |
| 2 | 92-026 | ¾" X CL NIPPLE BRASS LF | 1 |
| 3 | 92-158 | BALL VALVE, ¾" MxF, LF | 2 |
| 4 | 92-201 | Y-STRAINER, ¾" BRASS | 1 |

*ALL COMPONENTS ARE LEAD-FREE

| Item No. | Part Number | Description | Qty. |
|---|---|---|---|
| 1 | 258-40X100-XXX | 1" CIRCUITSOLVER® THERMOSTATIC BALANCING VALVE WITH INTEGRATED UNION | 1 |
| 2 | 92-044 | 1" X CL NIPPLE BRASS LF | 1 |
| 3 | 92-170 | BALL VALVE, 1" MxF, LF | 2 |
| 4 | 92-202 | Y-STRAINER, 1" BRASS | 1 |

*ALL COMPONENTS ARE LEAD-FREE

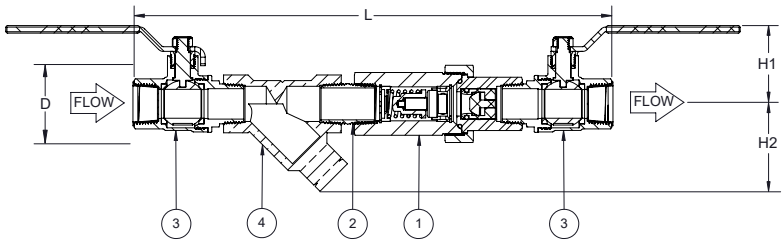


| | | Diameter (D) | | Length (L) | | Height 1 (H1) | | Height 2 (H2) | | Weight | | $C_v$ | | | Max. Pressure | | Max. Temp. | |
|---|---|---|---|---|---|---|---|---|---|---|---|---|---|---|---|---|---|---|
| Model No. | NPT | IN | MM | IN | MM | IN | MM | IN | MM | LBS. | KG | OPEN | CLOSED | DESIGN | PSIG | BAR | °F | °C |
| CSUAS- ½ -XXX | 1/2" | 1.8 | 46 | 10.8 | 275 | 1.8 | 46 | 2.5 | 64 | 2.9 | 1.3 | 1.3 | 0.2 | 0.60 | 200 | 14 | 250 | 121 |
| CSUAS- ½ -XXX-CV1 | | | | | | | | | | | | | | | | | | |
| CSUAS- ¾ -XXX | 3/4" | 2.0 | 51 | 12.8 | 326 | 2.0 | 51 | 3.3 | 84 | 4.7 | 2.1 | 1.8 | 0.2 | 0.85 | | | | |
| CSUAS- ¾ -XXX-CV1 | | | | | | | | | | | | | | | | | | |
| CSUAS-1-XXX | 1" | 2.5 | 64 | 14.4 | 366 | 2.3 | 59 | 3.8 | 97 | 7.0 | 3.2 | 3.3 | 0.2 | 1.57 | | | | |
| CSUAS-1-XXX-CV1 | | | | | | | | | | | | | | | | | | |

**Model Number Selection**

XXX refers to the desired closing temperature. When the water temperature drops below this point the CircuitSolver® will begin to open, allowing water to easily enter the return line. For example, if you want 120°F desired return temperature and the CSUAS is to be installed on a 3/4" line, the model number would be CSUAS-3/4-120. To add optional check valve insert –CV1 directly after the temperature designation in the model number.
Ex. CSUAS-3/4-120-CV1

ThermOmegaTech®
353 Ivyland Road, Warminster, PA 18974
1-877-379-8258 | CircuitSolver.com

CircuitSolver®
A ThermOmegaTech® brand

NSF/ANSI/CAN 61 / 372

## MATERIALS

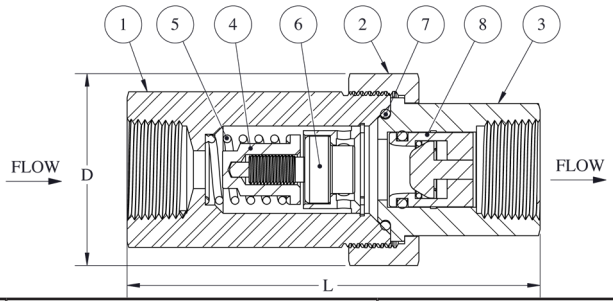


| ITEM | DESCRIPTION | MATERIAL |
|---|---|---|
| 1 | Valve Body w/ Union Threads | 300 series stainless steel |
| 2 | Union Nut | 300 series stainless steel |
| 3 | Female Threaded Insert | 300 series stainless steel |
| 4 | Plug | 300 series stainless steel |
| 5 | Operating Spring | 300 series stainless steel |
| 6 | Thermal Actuator | 300 series stainless steel |
| 7 | O-ring | Buna-N |
| 8 | Check Valve (optional) | GLASS FILLED NORYL |

## FLOW RATE CALCULATION USING "Cv" FACTOR

$$GPM = C_v\sqrt{\Delta P} \qquad C_v = \frac{GPM}{\sqrt{\Delta P}} \qquad \Delta P = \left[\frac{GPM}{C_v}\right]^2$$

## OPTIONAL CHECK VALVE

**Features and Benefits**
-100% factory tested drip tight operation
-Snap fit design, no retainer needed
-Extra-low head loss and low cracking pressure
-External O-ring in groove
**Certifications**
-ANSI/ NSF 61

| ITEM | MATERIAL |
|---|---|
| Cap | Glass filled Noryl |
| Guide | Glass filled Noryl |
| Plunger | Glass filled Noryl |
| Lip Spring | EPDM rubber |
| Spring | Stainless Steel AISI 301 |
| O-ring | EPDM rubber |

## OPTIONAL CHECK VALVE TECHNICAL DATA

Medium: Clear water only
Approximate Cracking Pressure: 0.29 PSI

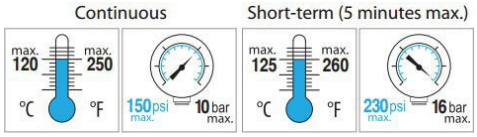


## TYPICAL SPECIFICATION

I. Furnish and install CIRCUITSOLVER® UNION ASSEMBLY with STRAINER as indicated on the plans. CIRCUITSOLVER® UNION ASSEMBLY with STRAINER shall be self-contained and fully automatic without additional piping or control mechanisms. Thermostatic valve shall be a CIRCUITSOLVER® as manufactured by ThermOmegaTech®, Inc., or equivalent.
   A. CIRCUITSOLVER® shall regulate the flow of recirculated domestic hot water based on water temperature entering the CIRCUITSOLVER® UNION ASSEMBLY with STRAINER regardless of system operating pressure. As the water temperature increases the valve proportionally closes dynamically adjusting flow to meet the specified temperature.
      1. CIRCUITSOLVER® never fully closes, even at the desired set point. There is always sufficient bypass flow back to the recirculating pump to prevent overheating or "dead heading" of the pump.
      2. CIRCUITSOLVER® is set at the factory for the desired return temperature. No field adjustments needed. Several temperature set points are available.
      3. CIRCUITSOLVER® UNION ASSEMBLY with STRAINER shall be available in ½", ¾", & 1" with FNPT at both ends.

II. All components in the CIRCUITSOLVER® UNION ASSEMBLY with STRAINER are made with lead-free materials. The major components that make up the CIRCUITSOLVER® are constructed of type 300 series SS.
   A. CIRCUITSOLVER® UNION ASSEMBLY with STRAINER shall be rated to 200 PSIG maximum working pressure.
      1. CIRCUITSOLVER® UNION ASSEMBLY with STRAINER shall be standard tapered female pipe thread, NPT.
   B. CIRCUITSOLVER® UNION ASSEMBLY with STRAINER shall be rated to 250°F (121.1°C) maximum working temperature.
   C. CIRCUITSOLVER® UNION ASSEMBLY with STRAINER shall be NSF/ANSI/CAN 61 & 372 certified for use in all domestic water systems.
   D. Thermal actuator shall be spring-loaded and self-cleaning, delivering closing thrust sufficient to keep orifice opening free of scale deposits.

III. Installation of CIRCUITSOLVER® UNION ASSEMBLY with STRAINER shall be made by qualified tradesmen. Install CIRCUITSOLVER® UNION ASSEMBLY with STRAINER in each domestic hot water return piping branch beyond last hot water device in that branch.
   A. Strainer is integrated in the valve assembly.
   B. Provide suitable access panel as required in non-accessible ceilings and walls.
   C. Pay close attention to flow arrow, especially with valves that have an integrated check valve.

CircuitSolver®
A ThermOmegaTech® brand
353 Ivyland Road, Warminster, PA 18974
1-877-379-8258 | CircuitSolver.com